RMG AUTOMATION

+91 9940594413

Single / Three Phase GSM Mobile Motor Pump Controller (or) Mobile Motor Starter

Model : GSM SPAT

User Manual

Version 2.0-10/22

http://rmgautomation.com

rmgworld@hotmail.com

1. INTRODUCTION

Our GSM Pump Controllers (Mobile Pump Starter) are very unique and specially designed for farmers, agriculturists and industries to operate and monitor remotely located motor pumps. They can switch ON and switch OFF the motor pumps from their homes or anywhere by using a SMS / CALL / Android Application.

This advanced GSM controller has special features for motor protection like Dry run and Overload. It also protects the motor during single phase fail/phase imbalance/phase reverse. It has the features of Stop/OFF timer and Schedule Timer. It notifies Power back alerts, Manual Motor ON/OFF alerts and Live Status of motor. Our GSM based mobile pump controller are manufactured with advanced embedded micro controller technology and quality process.

2. DESCRIPTION

- **POWER ON/OFF SWITCH:** Used to Power ON/OFF the controller.
- **POWER ON LED:** It indicates power supply to controller.
- **MOTOR ON LED:** It glows when the motor is in ON condition.
- **DRY RUN LED:** It indicates the dry running of motor and glows.
- **OVERLOAD LED:** It denotes if there is overload. During overload controller unit turns OFF the motor and protect it.
- **LINE FAULT LED:** It denotes line fault conditions during single phase fail / phase imbalance / phase reverse.
- **SIGNAL LED:** It indicates status of GSM signals. If this LED blinks for every 3 seconds signals are good and available. If this LED blinks for less than 1 second or does not blink, signals are not available.
- **SIM READY LED:** Denotes that the inserted SIM card is active and ready.
- **SMS/CALL LED:** Denotes when SMS/CALL is received / sent through GSM.
- **TIMER LED:** Denotes the timer ON condition and motor will be ON during the set time.
- **AUTO ON LED:** It glows when AUTO ON is enabled.
- **MANUAL ON LED:** Denotes when motor is switched ON manually from the starter.
- **CT COIL:** It helps to sense the current consumption of the motor.
- **Fuse Holder:** It has 300mA fuse to protect the controller from power surges. If fuse fails replace them.
- **Antenna Connector:** It is used for connecting the given 3dbi antenna provided.

3. TOOLS REQUIRED

- Drilling Machine
- Wooden gattas
- Insulation tape
- Line tester
- Wire stripper
- Simple hammer
- Drill gun
- Screws for mounting unit on wall

4. INSTALLATION PROCEDURE

Caution: Switch off the main power while doing the Power Connection steps.

Step 1: Insert your GSM SIM in the SIM slot given as shown in the GSM controller. The GSM SIM that is used must support 2G and have a SMS plan.

Step 2: Wall mount the GSM controller by using the screws in the given slots on its sides near your motor switch/starter location.

Step 3: For Single Phase -->Connect AC 230V to Red and Blue wires of GSM controller respectively. (refer figure 1). Do not use the yellow wire and dummy it.
For Three Phase -->Connect R,Y,B to L1, L2 and L3 input of the starter. (Refer figure 2)

Step 4: For Switch or MCB, Connect blue pair wire to the switch/MCB of the motor in parallel as shown in figure1.

Step 5: For starter, Connect blue pair wires to ON button of starter in parallel and black pair wires to OFF button in series (Refer to figure. 2 and figure. 3)

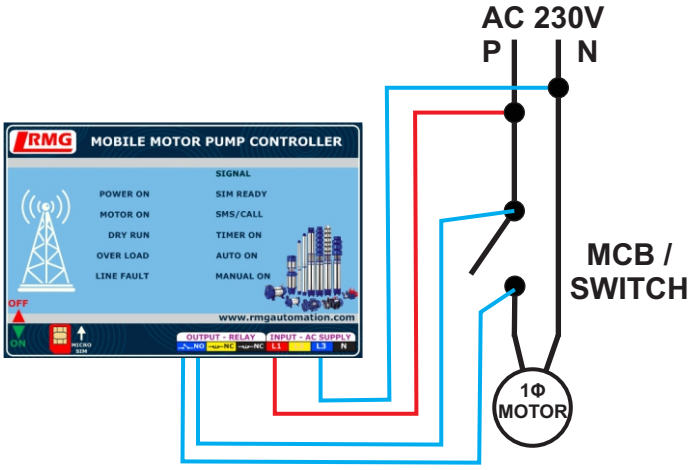

Figure1: 1Φ SWITCH/MCB

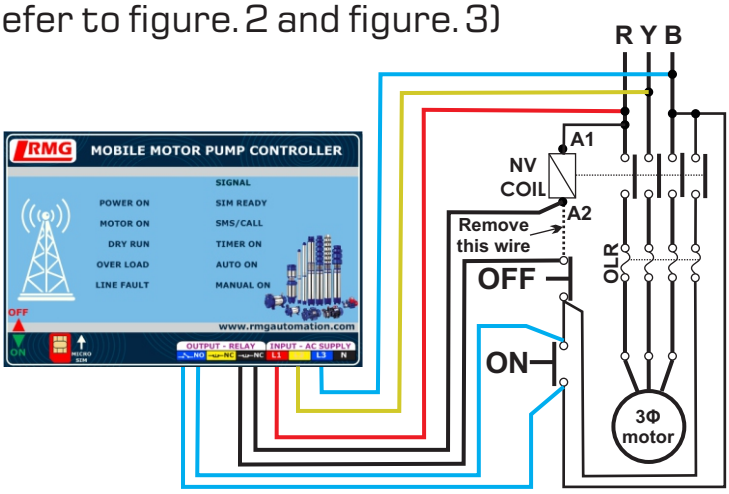

Figure2: 3Φ Starter

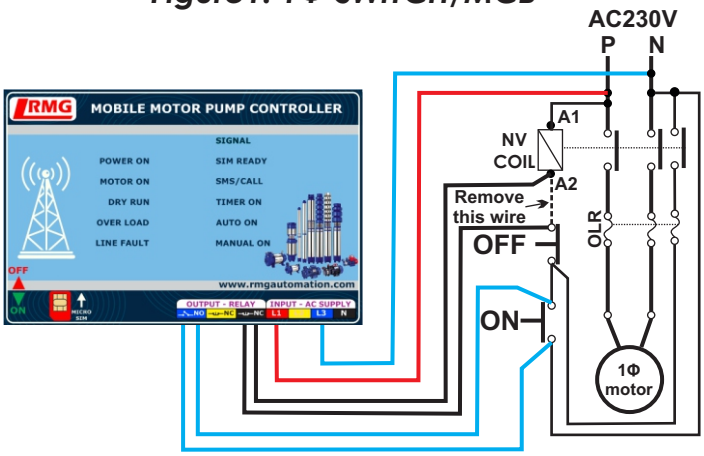

Figure3: 1Φ Starter

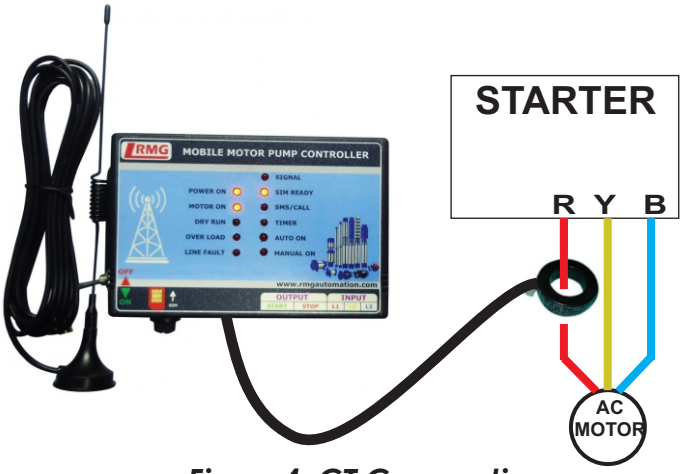

Figure4: CT Connection

Note: In case of doubts please call 044 - 43180017 or What's App 9940594413 from Monday to Saturday 10 am to 6 pm.

Step 6: Remove the output 'R' wire from starter & insert into the CT coil, and connect it back to the starter. (refer figure 4)

Step 7: Connect the antenna to the GSM unit and place it in open space. Do not keep the antenna inside the metal casing and must not be laid along with power wires.

This completes installation.

5. OPERATING PROCEDURE

- Switch ON the controller using on/off switch of the controller.
- Power ON LED lights up.
- GSM Signal LED blinks every one second trying to get connected to the network. Further, it blinks every 3 seconds ensuring that the GSM unit has been connected to the network.

1.MASTER USER REGISTRATION

Send SMS to the GSM SIM inserted into controller as "91YYYYYYYYY" (Y is your 10 digit mobile number). Now you will receive a message on your mobile that your mobile number is registered successfully.(You can register up to 5 users, procedure for registration and other commands are given in "List of commands").

Note: PLEASE REGISTER THE 1ST USER NUMBER (MASTER USER) WITHOUT FAIL.

2.ACTIVATION FOR REGISTERED USER

Send SMS command 71 to activate for registered user. Now the GSM unit responds to the registered user only.

3.MOTOR ON

Send SMS command 11 from your registered mobile number to TURN ON the motor or call from registered number. Call gets cut off after 5 rings. You will receive a message that motor is in ON condition.

4.UNDERLOAD AND OVERLOAD CURRENT:

After motor pump is on, send SMS command ASET to GSM unit.This command should be given only when the motor is running.

For manual setting, use the ULXX, OLXX commands in the list.

5.MOTOR OFF

Send SMS command 10 from your registered mobile number to TURN OFF motor or call from registered number. Call gets cut off after 2 rings. You will receive a message that motor is in OFF condition.

Other SMS commands are given below in " List of Commands"

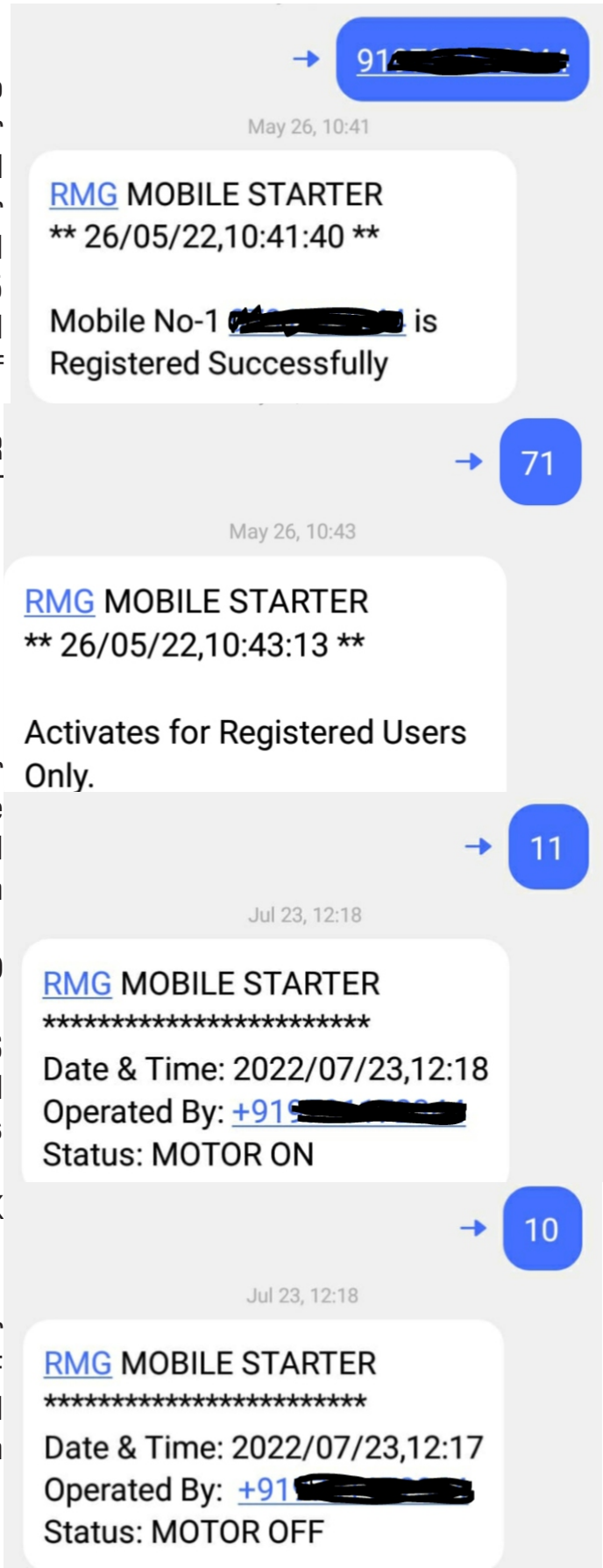

6. LIST OF SMS COMMANDS

SL. NO	SMS COMMAND	EXAMPLE	DESCRIPTION
1	00	00	It denotes the Power ON time
2	10	10	It will switch OFF the motor pump
3	11	11	It will switch ON the motor pump
4	12	12	It gives the ON/OFF status of your motor pump
5	13	13	It Disables AUTO ON operation. It will not Switch ON the motor pump when the power resumes
6	14	14	It Enables AUTO ON operation. It will Switch ON the motor pump when the power resumes.
7	70	70	Activates for ANY USERS
8	71	71	Activates for REGISTERED USERS
9	80	80	It disables the AUTO REPLY SMS facility
10	81	81	It enables the AUTO REPLY SMS facility
11	90	90	It gives the registered users list.
12	9XY	919940594413 92YYYYYYYYY 93YYYYYYYYY 94YYYYYYYYY 95YYYYYYYYY	It helps to store the user numbers (X-User 1, 2, 3, 4, 5 YYYYYYYYY-Mobile number).
13	*	*	It helps us to know the setting status.
14	T-HH:MM	T-00:10	T-HH:MM T-00:10 It helps to set the timer. By giving this command, motor gets on and stops after the set time is over. (HH – Hours ; MM – Minutes)
15	LC0	LC0	It disables 3-Phase Line Checking
16	LC1	LC1	It enables 3-Phase Line Checking
17	FD0	FD0	It disables Feedback Alert for Manual Motor ON / OFF

SL. NO	SMS COMMAND	EXAMPLE	DESCRIPTION
18	FD1	FD1	It enables Feedback Alert for manual Motor ON / OFF
19	ASET	ASET	It enables for Automatic Current Setting for Overload and Dry Run. This command functions only when motor is running
20	OLXX	OL15	It helps to enter the overload current setting manually. Eg. 15 Amps is set as Overload Current
21	ULXX	UL05	It helps to enter the underload current setting manually. Eg. 5 Amps is set as Underload Current
22	STX-HH:MM,HH:MM	ST1-06:00,06:30 ST2-19:00,19:30 ST3-11:15,11:45 ST4-08:00,09:30 ST5-22:00,05:00	It helps to schedule the ON time and OFF time. Totally 5 slots can be scheduled. (Note – Use 24 hour format) **Example:** ST1-06:00,06:30 St1 - Schedule Timer1 06:00 - ON Time 06:30 - OFF Time
23	SCT	SCT	It lists the scheduled time slots
24	SCTR	SCTR	It helps to reset the scheduled time slots

MISSED CALL FOR ON/OFF CONTROL

S.No.	DESCRPTION	COMMAND
1	ON	Call cuts after Long Ring(>5)
2	OFF	Call cuts after Short Ring(>2)

7. TROUBLE SHOOTING METHODS

#	Error	Solutions
1	Power fail	**a.** Check whether input supply is correctly given. **b.** Check whether the GSM power switch position is "ON" Check fuse is in good condition. If fuse is failed or burnt replace it with 300 Milliamps. Don't use more than that.
2	Motor not switching ON	**Start Relay:** **a.** Check whether connection of start relay (Blue pair wire) is properly given. **b.** Check start relay - It must be Normally Open. Start relay will become closed for 1-3 seconds while motor ON. Verify it using continuity tester or Multi-meter.
3	Motor not switching OFF	**Stop Relay:** **a.** Check whether connection of stop relay (Black pair wire) is properly given. **b.** Check stop relay - It must be Normally Closed. Stop relay will become open for 3 seconds while motor OFF. Verify it using continuity tester or Multi-meter.
4	SMS/CALL not working	**SIM card:** **a.** Check if SIM card is properly inserted as per the image shown in the GSM unit. **b.** Make sure that SIM Card has 2G support. Don't use SIM Cards that support 4G alone like JIO SIM. **GSM antenna location:** **a.** Keep it outside and don't enclose it. Antenna wire laying: **b.** Make sure that GSM antenna wire is laid separately. Don't take it along with power wires. **GSM signal LED:** **a.**Check if it is blinking for every 3 seconds – Network connected. **b.** If blinking every 1 second – Network Issue – Change another good network SIM card.
5	REPLY MESSAGE NOT COMING	Check the SIM balance and RECHARGE it.

RMG AUTOMATION is an Original Equipment Manufacturer (OEM) of home/industrial automation products. We are specialist in providing customized solutions and deal the following products.

- **Wired/Wireless Water Level Indicator**
- **Wired/Wireless Water Level Controller**
- **Real Timer / GSM Water Level Controller**
- **Wireless IR/RF/Mobile Remote Switch**
- **Single/Three Phase Starter Panels**
- **Single/Three Phase Ro Control Panels**
- **Single/Three Phase Gsm Mobile Starter**
- **Analog/Digital/Stop Timer**
- **Real Time/Sequential Switch**
- **Automatic Bell / Light Timer**
- **IOT Remote Monitor / Controls**
- **GSM Switch/Gate Opener/Alert**
- **Digital Clock/counter**
- **Single/Multi Color LED Display**

RMG AUTOMATION
11/6, Ayanavaram Road,
Ayanavaram,
Chennai - 600 023.
Tamilnadu, India.